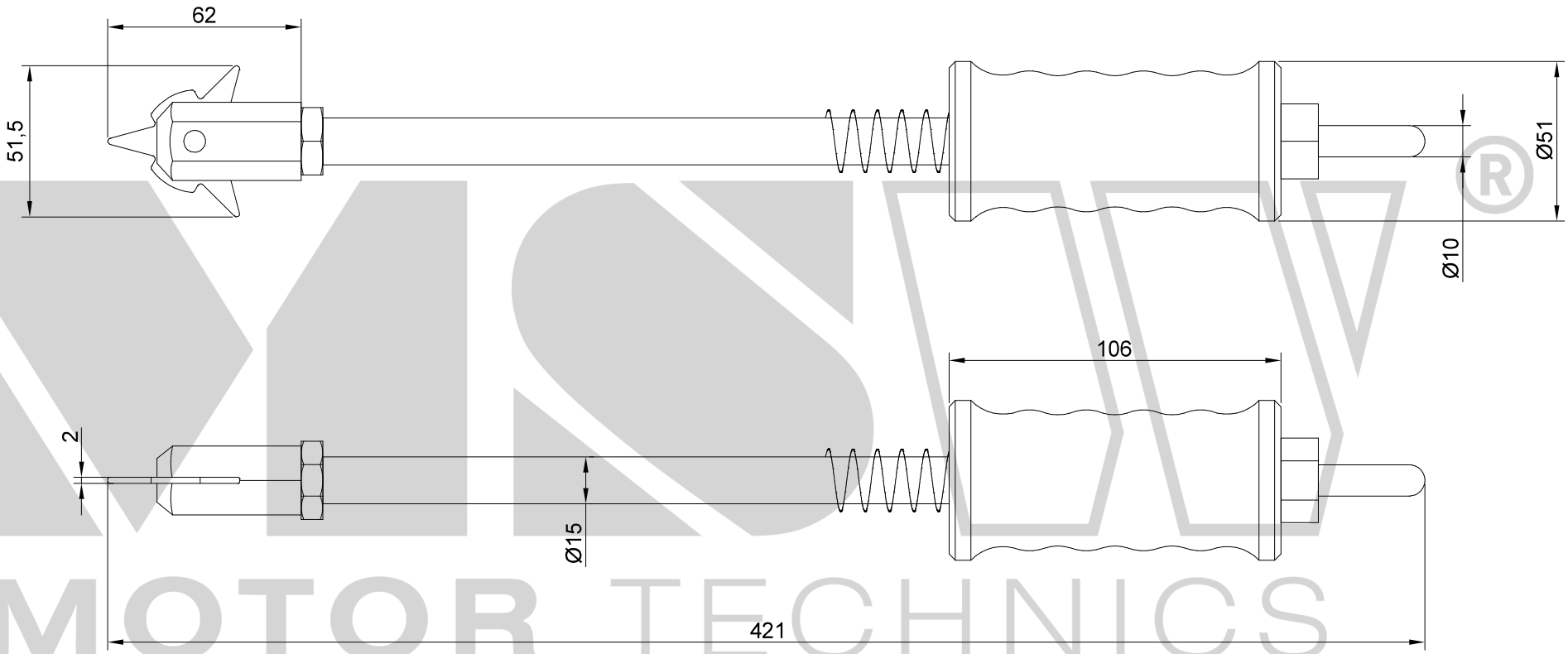

MSW MOTOR TECHNICS	Dent Pulling Spot Hammer Item number: 10060323	10.01.2018	Scale: 1:2 Unit: mm	Page: 1/1