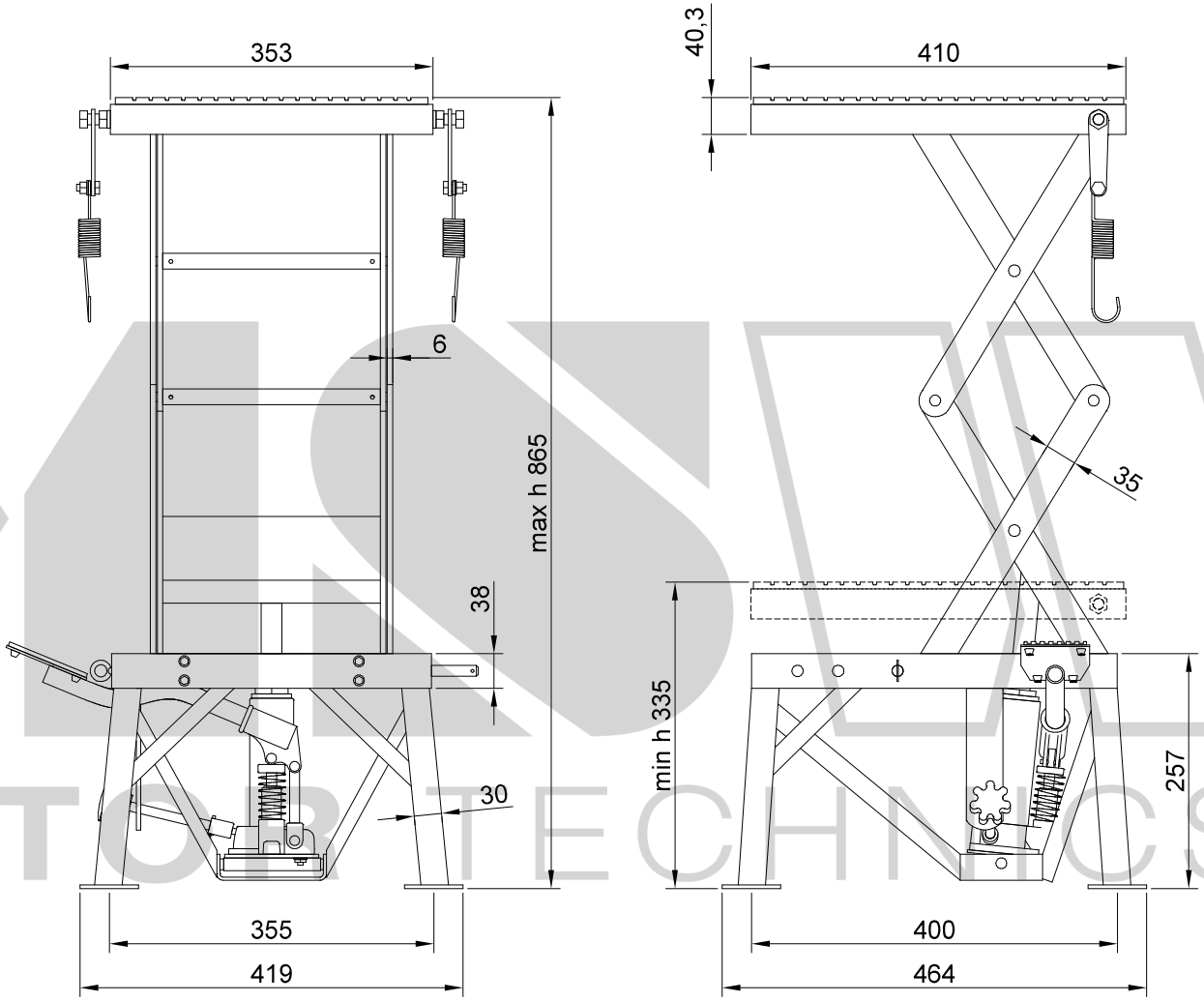

MSW MOTOR TECHNICS	Mobile Lift Table - 135 kg Item number: 6316	12.07.2017	Scale: 1:8 Unit: mm	Page: 1/1